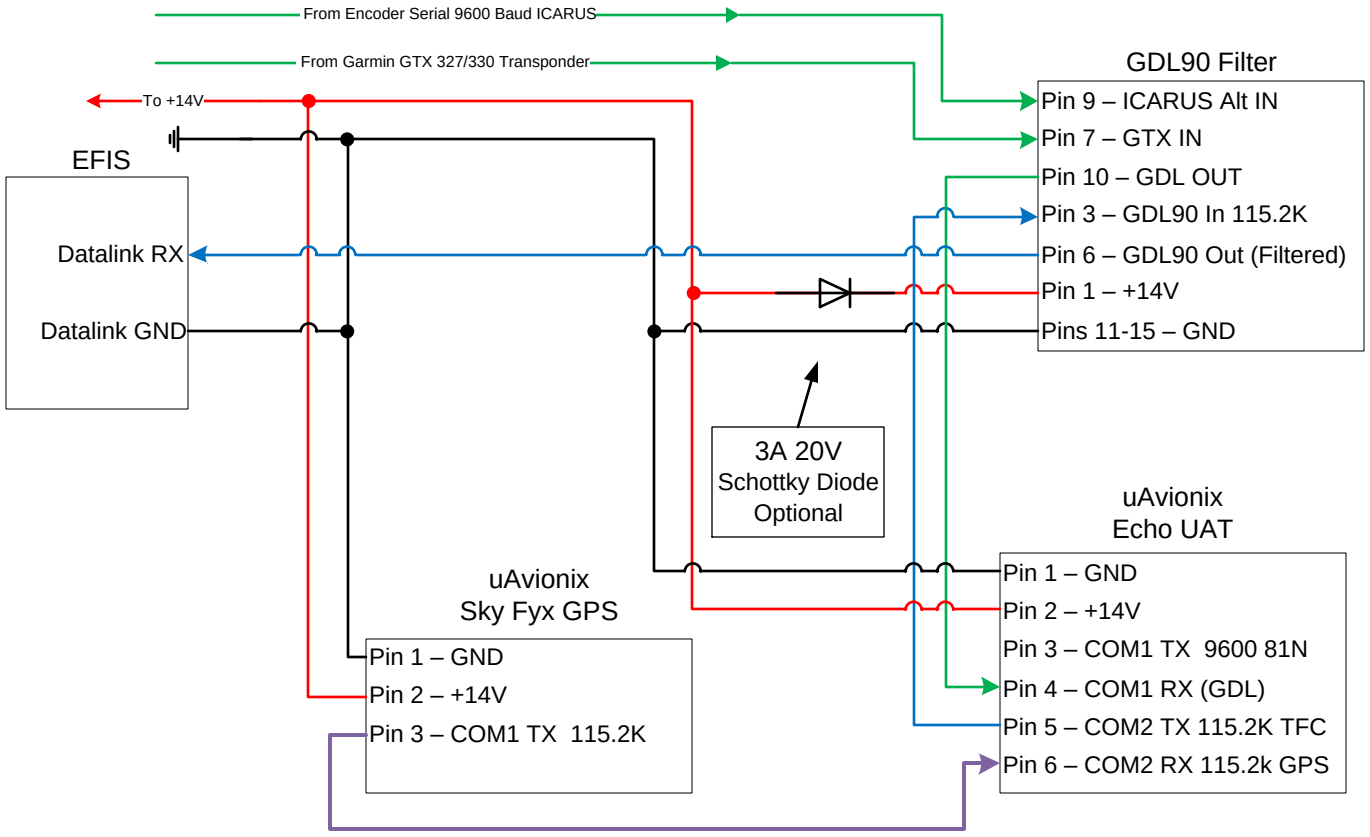ADS-B With GDL90 Converter and Echo UAT with SkyFyx GPS